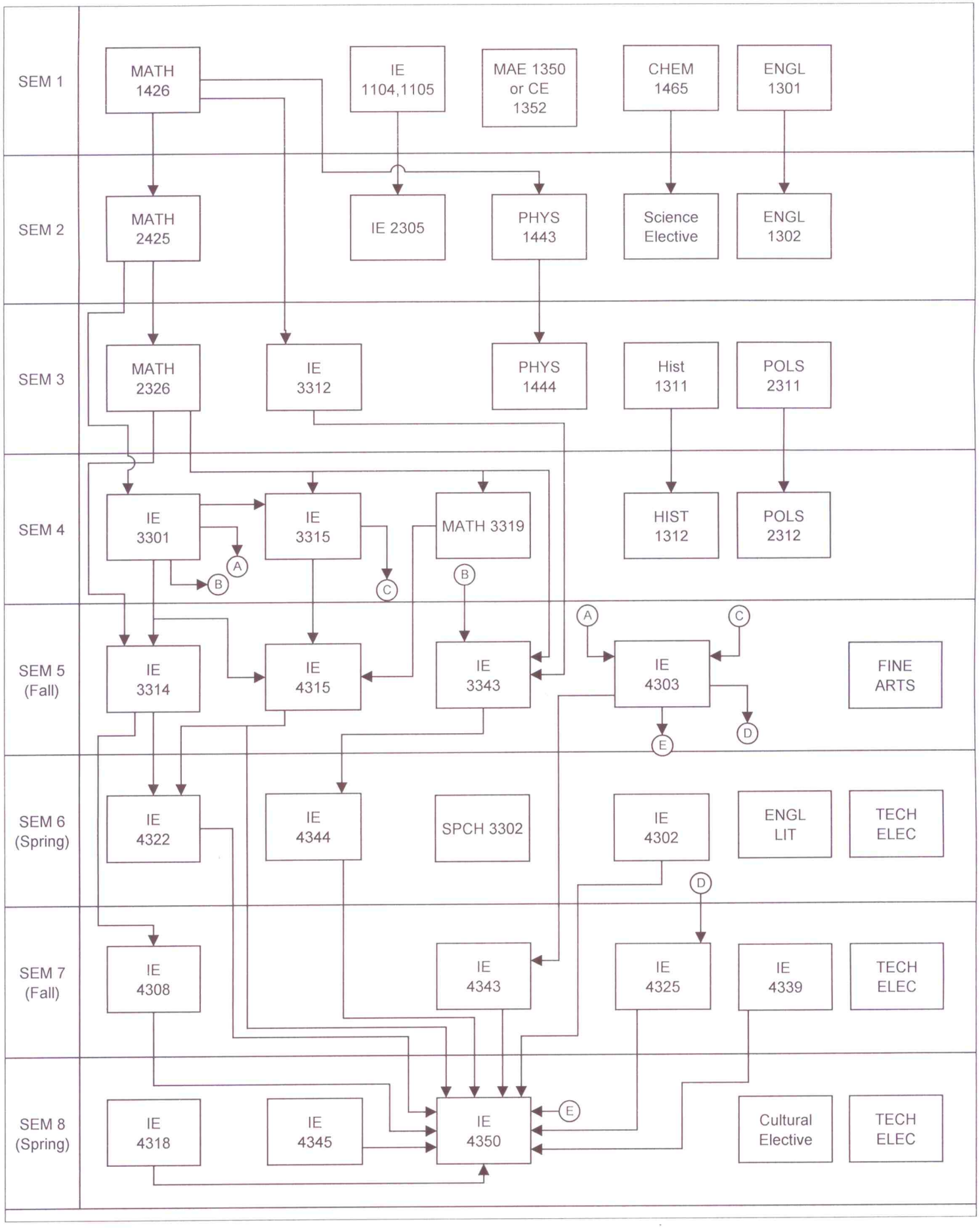
SEM 1
MATH 1426
IE 1104,1105
MAE 1350 or CE 1352
CHEM 1465
ENGL 1301
SEM 2
MATH 2425
IE 2305
PHYS 1443
Science Elective
ENGL 1302
SEM 3
MATH 2326
IE 3312
PHYS 1444
Hist 1311
POLS 2311
SEM 4
IE 3301
IE 3315
MATH 3319
HIST 1312
POLS 2312
A
B
C
B
SEM 5 (Fall)
IE 3314
IE 4315
IE 3343
A
C
IE 4303
FINE ARTS
E
D
SEM 6 (Spring)
IE 4322
IE 4344
SPCH 3302
IE 4302
ENGL LIT
TECH ELEC
D
SEM 7 (Fall)
IE 4308
IE 4343
IE 4325
IE 4339
TECH ELEC
SEM 8 (Spring)
IE 4318
IE 4345
IE 4350
E
Cultural Elective
TECH ELEC